SX210 Microprocessor Digital Timer

Economical, electronic, single setpoint reset timer... with 8 time ranges and 8 operating modes

RECOGNIZED CERTIFIED

The SX210 timer is a microprocessor based digital timer housed in a standard DIN style case (68mm square cutout). The small case and front bezel require minimal panel space yet provide large, easy to use programming keys and a .3 inch high LED display.

- Eight programmable time ranges and eight output operating modes
- Operating modes and all other setup functions programmed with miniature rocker switches located on the back of the housing
- Nonvolatile RAM memory retains setpoint, actual time values, and program parameters (10 year expected life of data in memory)
- NEMA 4 Hosedown Test rated
- Special surface just below the display on which the function can be marked with pen or pencil
- SET and ENT keys provide access to setpoint and front panel programmed functions
- Programming changes entered via increment and decrement keys
- Keypad "lock" function allows setpoint to be viewed, but does not allow unauthorized changes
- Four .3 inch red LED displays for easy readability
- Flashing LED (right side of display) indicates unit is in timing cycle and LED (left side of display) lights when programmed contacts are energized
- Two removable terminal blocks with screw gate style wire clamps permit prewiring of panel without the timer in place and eliminate rewiring if unit needs to be removed or replaced
- Two DPDT relay outputs with five amp contact ratings - one is a set of instantaneous contacts that energize when timing cycle starts and remain energized until timer is reset, and the other is a set of programmable contacts that can be programmed to turn on and off in several operating modes

SPECIFICATIONS

Time Ranges:

Sym.	Maximum Range	Minimum Setting
1	99.99 Sec.	.01 Sec.
2	999.9 Sec.	.1 Sec.
3	99.99 Min.	.01 Min.
4	999.9 Min.	.1 Min.
5	99.99 Hr.	.01 Hr.
6	999.9 Hr.	.1 Hr.
7	99 Min.: 59 Sec.	1 Sec.
8	99 Hr.: 59 Min.	1 Min.

Operating Voltage/Frequency: A6 - 120 VAC, 50/60 Hz
B6 - 240 VAC, 50/60 Hz

Setting Accuracy: ±0.05% of setting or 50 ms, whichever is larger

Repeat Accuracy: ±0.001% of setting or 35 ms, whichever is larger

Reset Time: 15 ms

Power on Response: 200 ms max.

Operating Temperature: +32˚ to +122˚F (0˚ to +50˚C)

Output Rating: Relay: 5 amp (resistive), 10 to 264 VAC
Current capacity derates from 7 amps at 250C to 5 amps at 500C with all output contacts used

Vibration: Unit function is unaffected by 2.5G sinusoidal vibration magnitude in both directions of the perpendicular mounting axes imposed from 10 to 100 Hz

Static Discharge: Unit function is unaffected by a constant 3600 volt peak, 60 Hz discharge applied to the grounded front plate at a relative humidity of less than 25%

Transient Protection: Immune to 2500 volts peak transients up to 50 microseconds in duration

Approvals: UL Recognition E96337
CSA Certification LR26861

OUTPUT OPERATING MODES

ON-Delay Operation

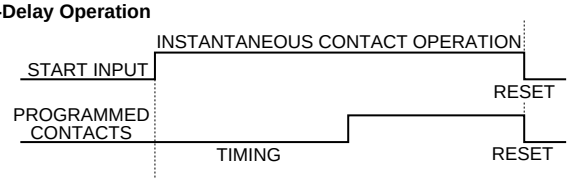

Interval Operation

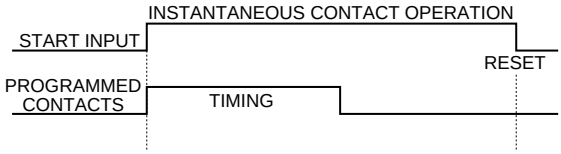

ON-Delay Operation with Time Totalization

The contacts operate as they do in the ON-Delay mode above. When the timing cycle is completed and the programmed contacts are energized, the SX210 timer begins time totalizing and continues until the unit is reset.

Interval Operation with Time Totalization

The contacts operate as they do in the Interval mode above. The contacts are energized during the timing cycle and deenergize at the end of the timing cycle. When the timing cycle is completed and the programmed contacts are deenergized, the SX210 timer begins time totalizing and continues until the unit is reset.

Single-Pulse Operation

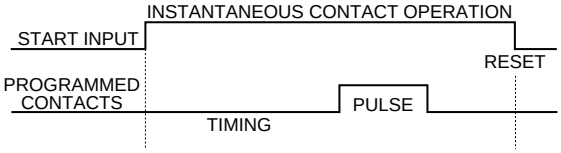

Pulse and Repeat Operation

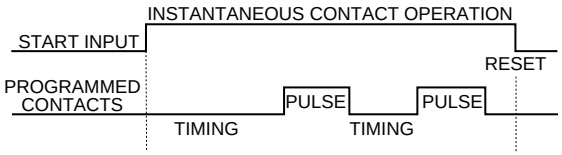

WIRING

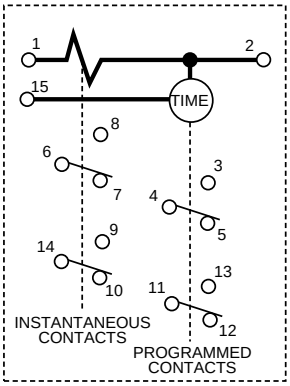

MOUNTING

The SX210 timer uses two removable mounting clips with adjustable screws to mount the enclosure in a panel as shown below. To mount the unit, slide the gasket onto the case until it is against the back of the bezel and place the unit in the panel cutout from the front of the panel.

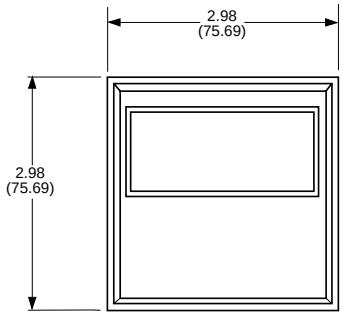

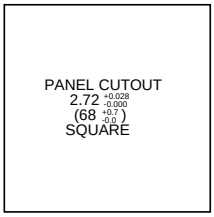

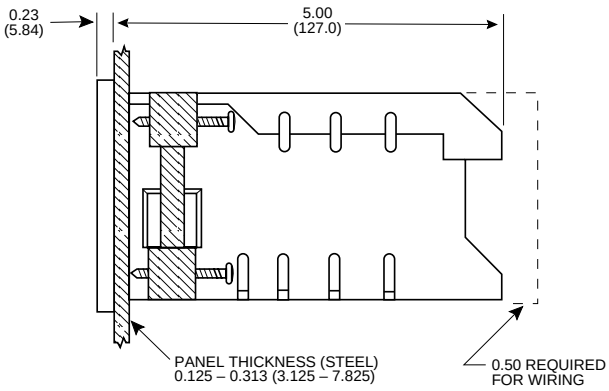

ORDERING INFORMATION

SX2 10 A6

OUTPUT TYPE

Sym.	Description
10	Relay Output

VOLTAGE & FREQUENCY

Sym.	Description
A6	120 VAC, 50/60 Hz
B6	240 VAC, 50/60 Hz